Installation instructions for the following model series

☐ *Digital interfaces:*

- **MPD / MSD with Profibus interface**
- **MPE / MSE with SSI output**
- **MPK / MSK with EtherCAT interface**
- **MPN / MSN with CANopen interface**

☐ *Analogue interfaces:*

- **MPA / MSA: analogue output, programmable**
- **MPC / MSC: analogue output or start/stop**

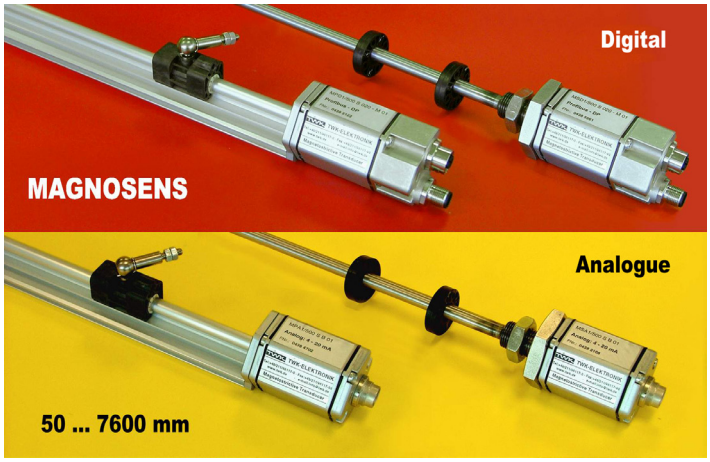

Mechanical requirements

1. The following criteria must be observed during installation of the linear transducer:
   - Do not bend the stainless steel tube (no radial or axial strain),
   - Do not carry out any drilling or welding on the transducer,
   - Do not open or dismantle the device
2. The accuracy of the measured values is dependent on the symmetry of the magnetic field's geometry, etc. This means that the positioning ring must be axially guided centrally to the tube. The measured value is contactlessly coupled into the waveguide in the tube via the positioning ring.

Electrical requirements

On installation of the linear transducer, it must be ensured that no strong magnetic or electrical interference fields occur in the area of the sensor.

Impermissible interference fields may influence the measurement accuracy

Magnetic interference fields

Guideline values measured around the circumference of the measurement tube

(in mT: milli Tesla)

Magnetic field strength	Influence on the measured value
< 3 mT in direction of rod:	None
3-19 mT in direction of rod:	Measuring error ≤ 1 mm
≥ 20 mT in direction of rod:	No usable measurement signal

Remanent or induced magnetic fields in the immediate vicinity of the sensor may cause magnetic disturbances. Due to the use of ferromagnetic materials, magnetic fields which are not located in the immediate vicinity of the sensor may spread and exert an influence on the sensor.

Electrical interference fields

Electrical interference, e.g. interference voltage overlay, is caused by improper or incorrect cable routing. In the case of a common voltage supply for the transducer and other devices (e.g. solenoid valves), interference peaks may arise from the other devices.

As a rule, the measures specified in the following can only be implemented to prevent low-frequency, capacitive, inductive and ohmic feedback.

Subject to the prerequisite that the coupling capacity on the signal and GND line is identical, high-frequency interference leads to a common-mode signal superimposed over the measured value.

A measuring amplifier with high common-mode suppression can be used to extensively prevent this interference. The important aspect is that no compensating currents are able to flow via the GND supply line.

Protective measures

The sensor should be secured using non-magnetic materials (e.g.: brass, plastic). On installation of the sensor into magnetisable materials, a distance of approx. 15 mm must be planned around the circumference and in the front area.

Welding seams which may lead to magnetisation should be demagnetised using corresponding measures.

- ☐ Establish the greatest possible distance from energy-rich and pulsed mains cables (no parallel routing).
- ☐ Use shielded twisted pair cables, minimum cable cross-section 0.14 mm².
- ☐ Use low-impedance lines.
- ☐ Ensure that all shield and housing connections are low-impedance and low-induction.
- ☐ Install the shield right up to the signal connection terminals.
  The cable's shielding conductor should not be interrupted.
- ☐ Loop the shielding conductor through separately from GND in distribution boxes and only connect to GND at one end. (Star-shaped cabling of shield and GND).
- ☐ Route the shielding conductor, reference conductor and protective conductor system separately and insulated from each other, and connect to each other at the point with the lowest shunt resistance to the electronics GND.

Hydraulic seal

Sealing the flange contact surface using an O-ring (e.g. 22.4 x 2.65) in a cylinder base groove is recommended. Sealing can also be carried out using an O-ring (15.3 x 2.2) in the flange's thread run-out groove.

Dimensions in mm

Application example: Installation variants with magnetisable material

Example 1

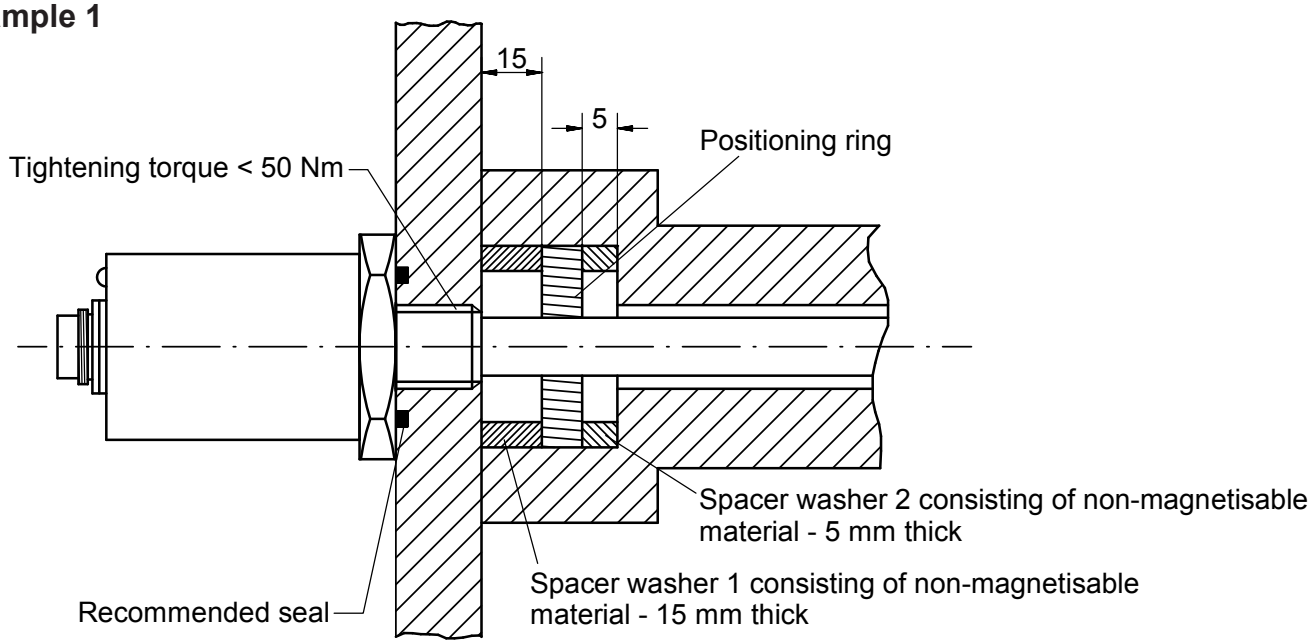
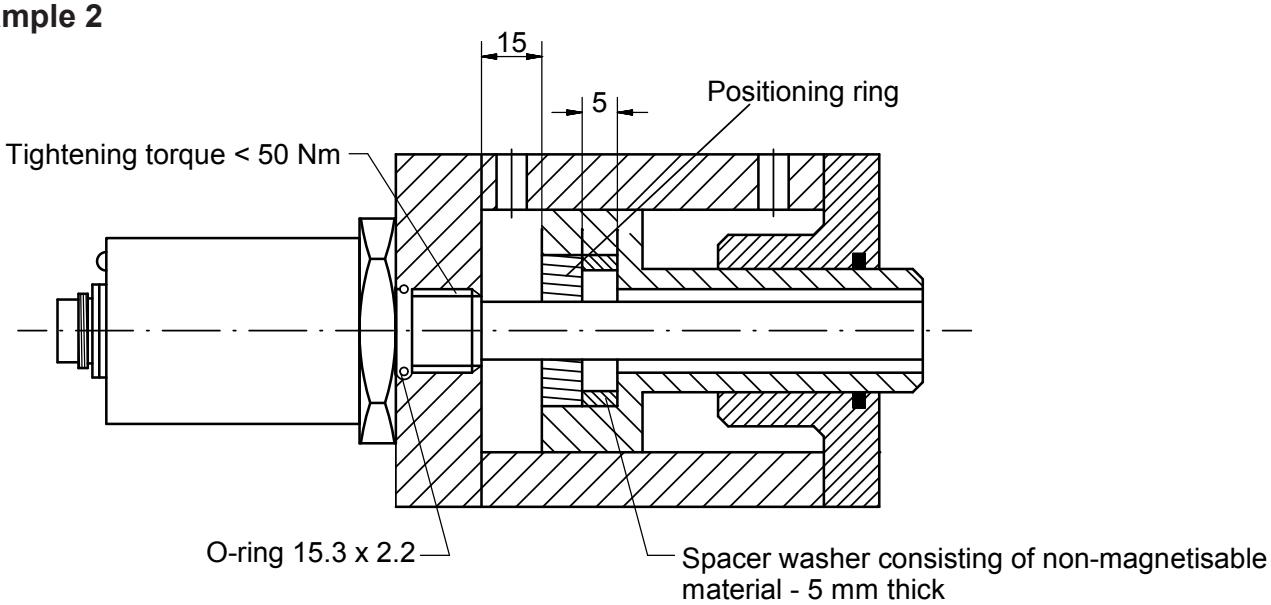
Example 2