SUPREME SENSORING

TWK

Absolute rotary encoder
Model TRT
Interface: PROFINET

Document no.:
TRT 12886 QE
01.03.2024

The illustration shows the TRT/S3 as single turn version with radial connector outlet.

- **Singleturn and multiturn versions**
- **Contactless, wear-free sensor system**
- **High vibration and shock resistance thanks to the robust mechanical design**
- **Position and speed signal**
- **Resolution: 65536 steps/360° (16 bit)**
- **Measuring range: 4096 revolutions**
- **Protection type: up to IP69K**
- **Special slewing ring software for non-reversing operation available**
- **Encoder Profile 4.2 (from firmware version 4.1)**
- **Ex-protection versions for zone 1/21 or 2/22 available**

PROFINET® | EX ATEX/IECEx ZONE 1/21 EXPLOSION PROTECTION | EX ATEX/IECEx ZONE 2/22 EXPLOSION PROTECTION | UL CERTIFIED OFFICIAL LISTED SENSOR

KEY INFORMATION OVERVIEW

DESIGN & FUNCTION

Recording of the angular position and revolutions by means of Hall sensors - multiturn version with absolute multiturn transmission for up to 4096 revolutions - data output plus parameterisation and diagnosis via PROFINET.

Robust housing manufactured from seawater-resistant aluminium or stainless steel - stainless steel shaft - ball bearing with radial shaft seal - magnettical sensor system - electrical connection via M12 connector or cable outlet.

In the version with code type "S" the TRT offers a slew ring functionality. This converts the sensor shaft position value into the postion of a slewing ring or a rotary table.

The slew ring encoder permits the adjustment of the number of teeths of the slew ring and of the encoder gear-wheel via the encoder parameters. In this way all gear ratios are possible and the encoder can be adapted to any slew ring by the user. The output values are the position of the slew ring in degrees (resolution adjustable) and his velocity in degree/time basis (time basis adjustable).

FEATURES INTERFACE

The Profinet interface according to IEC 61158/61784 or PNO specifications order No. 2.712 and 2.722, version 2.2 respectively 2.4 (from HW version 2), is integrated into the model series TRT absolute encoders.

Real time classes 1 - 3 are supported, i.e. Real Time (RT) and Isochronous Real Time (IRT) plus the requirements of conformance class C. The integrated 2-fold switch enables the TWK PROFINET absolute encoders to be used in star, tree and line network topologies.

An exhaustive description of integration into a PROFINET network can be found in the manual TRT 12887.

- Real Time (RT) and Isochronous Real Time (IRT)
- Device exchange without interchangeable medium or programming device
- Prioritised start-up (Fast Start Up)
- Media redundancy possible
- Firmware update via PROFINET
- Programming via PROFINET

If the device is used in a manner not specified by the manufacturer, the protective effect of the device may possibly be impaired.

TECHNICAL DATA

ELECTRICAL DATA

UL® note	UL® : Use a power supply according to IEC/UL60950-1 / IEC/UL62368-1 / VDE 0805 SELV using a overcurrent protection according to UL61010, table18, ≤8.33 A @ 24 VDC (≤120 s) or LEC/LPS/Class2
Sensor system	magnetical
Operating voltage	+ 15 VDC to + 35 VDC (reverse voltage protection) (+ 9 VDC to + 35 VDC on request)
Power consumption	< 3 W
Switch-on current	< 500 mA
Resolution	4096 steps/360° (12 bit) or 8192 steps/360° (13 bit) HW version 2: 65536 steps/360° (16 bit)
Measuring range	4096 revolutions (multiturn version)
Total number of steps	24 bit or 25 bit HW version 2: 28 bit
Absolute accuracy of the position value	± 0.2 % (with reference to one revolution) ± 0.1 % (singleturn version)
Absolute accuracy of the speed value	± 0.8 % (related to the maximum value of 32767 steps/gate time), ± 0.4 % (singleturn version)
Internal updating time of the position value	1 ms
Internal updating time of the speed value	1 ms
Output code	binary
Code path	CW / CCW
Speed signal	16-bit, with prefix, unit: steps/gate time (gate time adjustable in the 10 ... 1000 ms range, default: 10 ms)

INPUT/OUTPUT DATA

Depending on the used profile	see PROFINET data below and manual TRT 12887

PROFINET DATA

MAC address	88:A9:A7:BX:XX:XX The relevant, current MAC address is located on the model plate
Transfer technology	100 Base-TX
Transfer rate	100 Mbit/s
Line length	Max. 100 m (between two subscribers)
Minimum transmission cycle	250 µs
Profinet version	V2.2, from HW version 2: V2.42
Encoder profile version	V1.1, from firmware version 4.1: V4.2

DIAGNOSIS LEDS

LED 1 (VS, green)	power supply
LED 2 (L1, green)	link 1, network connection established
LED 3 (L2, green)	link 2, network connection established
LED 4 (NS, green/red)	device and network status and error modes

MECHANICAL DATA

Operating speed	1000 rpm max. (for protection type IP65 up to 10,000 rpm)
Angular acceleration	10^5 rad/s^2 max.
Moment of inertia (rotor)	20 gcm^2
Operating torque	≤ 8 Ncm (at 500 rpm)
Starting torque	≤ 4 Ncm
Perm. shaft load	250 N axial, 250 N radial (flange form 64-HP: 500 N axial and radial)
Bearing service life *	> 10^9 revolutions
Weight	0.45 kg (0.7 kg at steel and stainless steel version)

* These values apply at maximum shaft load. Higher values are achievable at lower loads.

TECHNICAL DATA

ENVIRONMENTAL DATA

Operating temperature range . . . . . - 40 °C to + 85 °C
Storage temperature range . . . . . - 20 °C to + 60 °C (due to packaging)
Resistance. . . . . To shock . . . . . 500 m/s²; 11 ms (DIN EN 60068-2-27)
To vibration . . . . . 250 m/s²; 10 to 2000 Hz (DIN EN 60068-2-6)
Protection type . . . . . IP66/IP67, with cable output IP68, IP69K optional (DIN EN 60529),
with nilos ring instead of shaft seal ring: IP65 (protection types not tested by UL)
Salt mist test . . . . . Test Kb according to IEC 60068-2-52
Maximum altitude . . . . . 2000 m

EMC STANDARDS

EN 61000-6-4:2006 + A1:2011	EMC Part 6-4: Generic standards-Emision standard for industrial environments
EN 61000-6-2:2005	EMC Part 6-2: Generic standards-Immunity for industrial environments
EN 61000-4-2:2009	EMC Part 4-2: Testing and measurement techniques - Electrostatic discharge immunity test
EN 61000-4-3:2006 A1:2008 + A2:2010	EMC Part 4-3: Testing and measurement techniques - Radiated, radio frequency. electromagnetic field immunity test
EN 61000-4-4:2004	EMC Part 4-4: Testing and measurement techniques - Electrical fast transient/burst immunity test
EN 61000-4-5:2006	EMC Part 4-5: Testing and measurement techniques - Surge immunity test
EN 61000-4-6:2009	EMC Part 4-6: Testing and measurement techniques - Immunity to conducted disturbances, induced by radio-frequency fields
EN 61000-4-8:2010	EMC Part 4-8: Testing and measurement techniques - Power frequency magnetic field immunity test. Power frequency magnetic field immunity test: 30 A/m (test criterion A), 100 A/m (test criterion B)
EN 61000-4-29:2000	EMC Part 4-8: Testing and measurement techniques - Voltage dips, short interruptions and voltage variations on d.c. input power port immunity tests
IEC 61326-3-2:2018	Electrical equipment for measurement, control and labortory use - EMC requirements Part 3-2: Immunity for safety-related systems and for equipment intended to perform safety related functions (functional safety) - industrial applications with specified electromagnetic environment

EXPLOSION PROOF

Zone 2 and zone 22 . . . . . Realisation in standard housing with cable output, on demand
Zone 1 and zone 21 . . . . . Realisation in explosion-proof housing, additional informations see: TRX16360

UL® STANDARDS AND DEFINITIONS (ONLY HARDWARE VERSION 2)

TRT certified according to UL61010-1
UL/CSA certificate number E517808
TRT installation type . . . . . TYPE 1
Intended use . . . . . Indoor use only
Power supply. . . . . According to LEC/LPS/Class2 (valid for all TRT connectors) or SELV using an overcurrent protection (acc. to UL61010), Table 18, ≤8.33 A @ 24VDC

External circuits intended to be connected to this device shall be galvanic separated from mains supply or hazardous live voltage by reinforced or double insulation and meet the requirements of SELV/PELV - Limited Energy (Class III, LPS) circuit of UL/CSA 61010-1.

TECHNICAL DATA

PROGRAMMABLE PARAMETERS

CLASS2 (ENCODER PROFILE 1.1)

Scaling	OFF / ON	
Code path	CW / CCW	CW (clockwise): ascending values on rotation clockwise CCW (counter clockwise): descending values on rotation clockwise (viewed looking at the shaft)
Resolution [steps / 360°]	1 to 65536*	Steps per 1 revolution
Total number of steps [steps]	1 to 268435456*	Total measuring range
Reference value [steps]	0 to total number of steps -1	For adaption to the application, the position value can be set to any value within the measuring range. Once programmed, the reference value can be set via bit 0 in the control word
Gate time [ms]	10 to 1000	Time basis for speed registration

CLASS4 (ENCODER PROFILE 4.2), AVAILABLE FROM FIRMWARE VERSION 4.1

Parameter initialsation control	PRM data block/ Internal memory	Controls whether the encoder parameters are initialized by the Profinet Controller during startup (PRM data block) or by the internal memory of the encoder
Parameter write protect	Write all/read only/ write controller/ write supervisor	Controls the write access via the acyclic communication
Parameter 65005 write protect	Write all/read only	The parameter 65005 contains the bits (param. initialization, param. write protect and reset control protect)
Reset control protect	Write all/read only	Controls the write access on parameter 972 (drive reset)
Class 4 functionality	ON / OFF	Enables the scaling, the preset function and the code sequence
Compatibility mode	OFF	Not supported
Code sequence	CW / CCW	CW (clockwise): ascending values on rotation clockwise CCW (counter clockwise): descending values on rotation clockwise (viewed looking at the shaft)
Preset function	OFF / ON	Enables the preset function for G1_XIST1
Scaling function	OFF / ON	Enables the scaling
Channel related diagnosis	OFF / ON	Not supported
Encoder type	Rotary encoder	
Resolution [steps / 360°]	1 to 65536	Steps per 1 revolution
Total measuring range [steps]	1 to 268,435,456 or 1 to 65536 for single-turn encoder	Results from set resolution times desired number of revolutions, the maximum value is 65536 x 4096
Maximum tolerated failures of Master Sign-Of-Life	0 to 255	Not supported
Velocity measuring unit	steps/s (100ms, 10ms), rpm, N2/N4 normalised	
Velocity reference value for N2/N4	3000.0000	Specifies the 100% value for the N2/N4 output

* Depending on type

TECHNICAL DATA

PROGRAMMABLE PARAMETERS (CONT.)

SLEWING RING ENCODER

Code path	CW / CCW	CW (clockwise): ascending values on rotation clockwise CCW (counter clockwise): descending values on rotation clockwise (viewed looking at the shaft)
Number of teeth slewing ring	1 to 65535	Number of teeth of the machine's slewing ring
Number of teeth encoder pinion	1 to 65535	Number of teeth of the encoder pinion which gears in the slewing ring
Resolution position [steps]	1 to 65536 x i*	Desired resolution of the slewing ring position, e.g. 3600 for a resolution of 0,1°. The maximum possible value depends on the gear ratio i*
Resolution for speed calculation [ms]	1 to 65536 x i*	The resolution of the slewing ring used for the velocity calculation. This parameter can be adjusted independend of the parameter "Resolution position", e.g. 36000 for a velocity resolution of 0,01° / gate time. The maximum possible value depends on the gear ratio i*
Gate time [ms]	10 to 1000	Time basis of the velocity measurement
Reference value [steps]	0 to resol. postion-1	To adapt to the users application the encoder can be set to any value within the measuring range. In case of the slewing ring encoder this means 0 to resolution position -1 (= max. value). The preset function is processed via the output data and can be executed in the user programm of the PLC

* i = Gear ratio Number of teeth slewing ring to Number of teeth encoder pinion

TECHNICAL DATA

PRINCIPAL CIRCUIT DIAGRAM

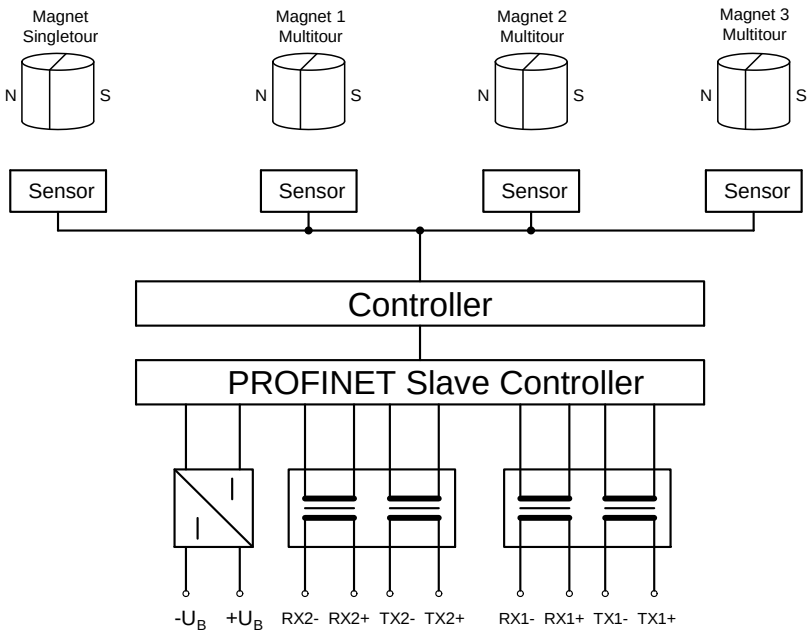

ELECTRICAL CONNECTION

ELECTRICAL CONNECTION

PROFINET . . . . . M12 connector D coded, 4 pin, female for port 1 and port 2 or cable output via cable glands
Power supply . . . . . M12 connector A coded, 4 pin, male or cable output via cable gland

PROFINET CONNECTOR, 2 X M12, D-CODED, SOCKET/FEMALE

PIN . . . . . Function
1 . . . . . TX+
2 . . . . . RX+
3 . . . . . TX-
4 . . . . . RX-

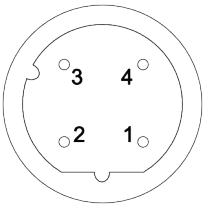

PROFINET CABLE OUTPUT (2X)

Colour* . . . . . Function
Yellow . . . . . TX+
White . . . . . RX+
Orange . . . . . TX-
Blue . . . . . RX-

SUPPLY CONNECTOR, M12, A-CODED, PINS/MALE

PIN . . . . . Function
1 . . . . . +UB (+24 VDC)
2 . . . . . not used
3 . . . . . -UB (0 VDC)
4 . . . . . not used

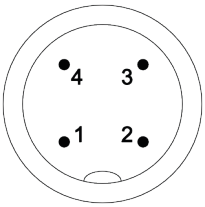

SUPPLY CABLE OUTPUT

Colour. . . . . Function
White . . . . . +UB (+24 VDC)
Brown . . . . . -UB (0 VDC)

* Industrial Ethernet cable colours according to ISO / IEC 8802-3.

ELECTRICAL CONNECTION

Cables for UL® certified systems . . . . . Only CYJV/PVVA cables should be used for the connection. Please use only cables with a cross-section of at least AWG22 and maximum temperature load (min. 90°C).

CABLE OUTLET PROFINET (OPTIONAL)

Cable type . . . . . PROFINET Type-C, 4 x 0.36 mm² (AWG22)
Cable jacket. . . . . PUR, color: green
Temperature range . . . . . - 40 °C to + 70 °C
Outer diameter . . . . . 6.5 mm ± 0.2 mm
Min. bend radius . . . . . 5 x d fixed installation, 10 x d freely movable

CABLE OUTLET POWER SUPPLY (OPTIONAL)

Cable type . . . . . 2 x 0.75 mm², shielded
Cable jacket. . . . . PUR, color: gray
Temperature range . . . . . - 40 °C to + 80 °C fixed installation, - 5 °C to + 70 °C freely movable
Outer diameter . . . . . 6 mm
Min. bend radius . . . . . 6 x d fixed installation, 15 x d freely movable

ORDER CODE FORMAT

TRT	58 - K	A	65536	R	4096	C4	M	T	01	STANDARD VERSION

TRT	TRT Absolute encoder with Profinet interface		
58 - K	Design form, flange and shaft	58 - K	Clamped flange, shaft 10 mm with flattened area
		58 - KF	Clamped flange, shaft 10 mm with woodruff key
		58 - KP	Clamped flange, shaft 10 mm with parallel key (recommended for safety)
		58 - KZ	Clamped flange, shaft for play-compensating toothed gear ZRS
		58 - S	Synchro flange, shaft 6 mm
		58 - SR	Synchro flange, clamping shaft 12 mm (torque plate see accessories)
		58 - ST	Synchro flange, clamping shaft 6 mm with flattened area
		64 - HP	Heavy duty flange for shaft loads up to 500 N, shaft 10 mm with parallel key
		64 - NZ	Cam switch flange, shaft for play-compensating toothed gear ZRS
		65 - S	Synchro flange, shaft 12 mm
		65 - SP	Synchro flange, shaft 12 mm with parallel key
		65 - SF	Synchro flange, shaft 12 mm with woodruff key
		66 - K	Clamped flange, shaft 10 mm with flattened area
		66 - KP	Clamped flange, shaft 10 mm with parallel key
		78 - KP	Ex housing for zone 1/21, clamped flange, shaft 10 mm with parallel key
		78 - SP	Ex housing for zone 1/21, synchro flange, shaft 10 mm with parallel key
		78 - VP	Ex housing for zone 1/21, square flange, shaft 10 mm with parallel key
		105 - M	Mounting flange, shaft 12 mm
		105 - MP	Mounting flange, shaft 12 mm with parallel key
A	Housing material	A	Aluminium 3.2315 (AlMgSi1)
		B	Burnished steel for shielding strong magnetic fields
		S	Stainless steel 1.4305 (AISI 303)
		V	Stainless steel 1.4404 (AISI 316L) resp. 1.4401 (AISI 316) for design form 78
		W	Stainless steel 1.4521 for shielding strong magnetic fields
65536	Resolution in steps/360°	4096	12 bit
		8192	13 bit (code type S, only 8192 possible)
		65536	16 bit (from HW version 2)
R	Code	R	Position as a double word (unsigned integer32)
		W	Position value divided into two words with 1. word multiturn data,
		S	2. word singleturn data Binary code, slewing ring function (unsigned integer32)
4096	Measuring range	4096	Number of revolutions (Single turn version: leave blank)
C4	Profile	C4	Encoder-Profile 1.1 (Class2)
		E4	Encoder-Profile 4.x (Class4)
M	Electrical connection	M	3 connectors radial
		Mx	Connector output radial (x = number of connectors**)
		Ky	Cable output radial (y = cable length, e.g. 2 or 0,54), remark: for EX-protection only cable output possible
		T	3 connectors axial (T: possible & standard at HW version 2)
		Tx	Connector output axial (x = number of connectors**)
T	Output	T	PROFINET 100Base-TX
01	Electrical and mechanical variants*	01	Standard
		11	Protection type IP69K
		23	with Nilos ring instead of shaft seal ring

* The basic versions according to the data sheet bear the number 01. Deviations are identified with a variant number and are documented at TWK.
** Number of outputs: 1 = Hybrid, 2 = 1x power supply, 1x PROFINET, (don't fill in: 3 = 1x power supply, 2x PROFINET)

ACCESSORIES (SELECTION)

MATING CONNECTORS

Order number, Datasheet	Type	Design & wire fixing	Housing-material	Cable ø & wire size	Shielding & IP grade
STK4GP81, STK14570	M12-D 4-pole, male	Straight, screws	Zinc die-cast nickel-plated	5 – 8 mm ≤ 0.75 mm²	On housing IP67
STK4GP110, STK14569	M12-D 4-pole, male	Straight, screws	Stainless steel 1.4404	5.5 – 8.6 mm ≤ 0.75 mm²	On housing IP67
STK4GS60, STK14572	M12-A 4-pole, female	Straight, screws	Zinc die-cast nickel-plated	4 – 6 mm ≤ 0.75 mm²	On housing IP67
STK4GS104, STK14571	M12-A 4-pole, female	Straight, screws	Stainless steel 1.4404	5.5 – 8.6 mm ≤ 0.75 mm²	On housing IP67
STK4WP116, STK15518	M12-D 4-pole, male	Angled, IDC (insul. displ.)	Zinc die-cast nickel-plated	4 – 8 mm ø 1 – 1.6 mm	On housing IP67
STK4WS117, STK16392	M12-A 4-pole, female	Angled, PLC (push lock)	Zinc die-cast nickel-plated	4 – 8 mm ø 0.14 – 0.75 mm²	On housing IP67

CONNECTING CABLE - PROFINET

KABEL-x-114 . . . . . Industrial Ethernet data cable with M12 connectors, D-coded, moulded on at both ends.
x = length in meters, standard lengths: 1, 2, 3, 5, 10, 15 and 20 m, see datasheet KBL14673

KABEL-x-118 . . . . . Industrial Ethernet data cable with M12 connector to RJ 45, IP 20.
x = length in meters, standard lengths: 2, 3, 5, 10, 15 and 25 m, see datasheet KBL14655

CONNECTING CABLE - POWER SUPPLY

KABEL-x-191 . . . . . Power supply cable with moulded M12 connectors A coded straight, 2. side open.
x = length in meters, standard lengths: 2, 5, 10, 15, 20 and 25 m, see datasheet KBL13411

SHAFT COUPLINGS

BKK. . . . . Bellows coupling, large, see datasheet BKK11840
BKM . . . . . Bellows coupling, small, see datasheet BKM11995
KK14 . . . . . Clamp coupling, see datasheet KK12301

TOOTHED GEARS

ZRS . . . . . Play-compensating toothed gear, see datasheet ZRS11877
ZRM. . . . . Standard toothed gear, see datasheet ZRM13229

STATOR COUPLING / TORQUE SUPPORT

ZMS. . . . . See datasheet ZMS12939

GENERAL MECHANICAL ACCESSORIES

Syn. clamps etc.. . . . See datasheet MZ10111.

DOCUMENTATION

DOCUMENTATION

The following documents plus the GSD file, a bitmap and example programmes can be found in the Internet under www.twk.de/en in the documentation area, model TRT.

Data sheet TRT12886
Manual. TRT12887
PROFINET certificate TRT13268
GSD file . . . . . GSD files TRT
Installation instructions AN16169
CE Declaration of Conformity ZE12467
UKCA Declaration of Conformity ZE16569
Reach compliant QS15286
RoHS compliant QS13284
3D CAD file . . . . . 3D CAD files TRT

INSTALLATION DRAWINGS

MODEL TRT58-KPA65536R4096C4TT01

Dimensions in mm

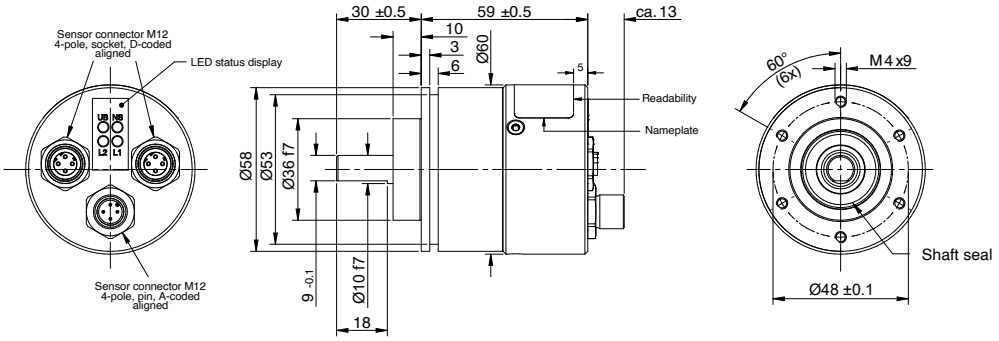

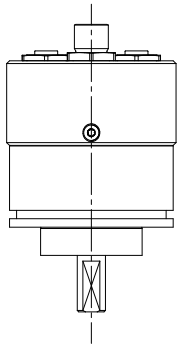

MODEL TRT58-STA65536R4096C4TT01

Dimensions in mm

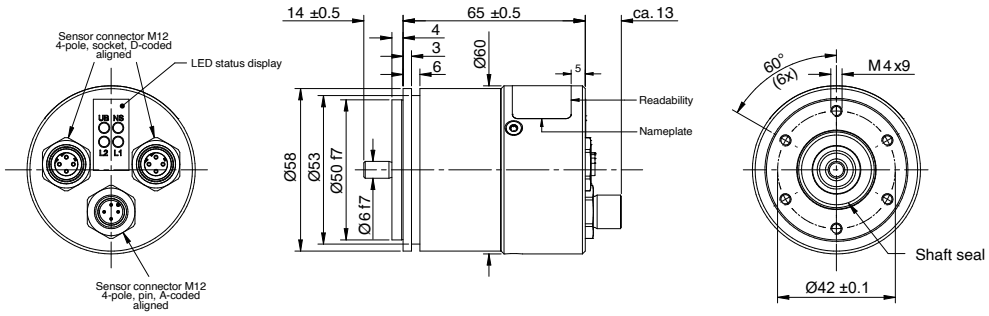

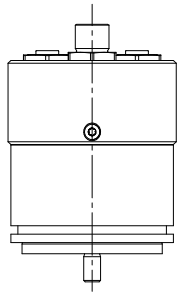

NOTE

The singleturn version is about 15 mm shorter!
The connectors of the stainless steel version are not aligned.

INSTALLATION DRAWINGS

MODEL TRT58-KA65536R4096C4MT01 - STANDARD VERSION

Dimensions in mm

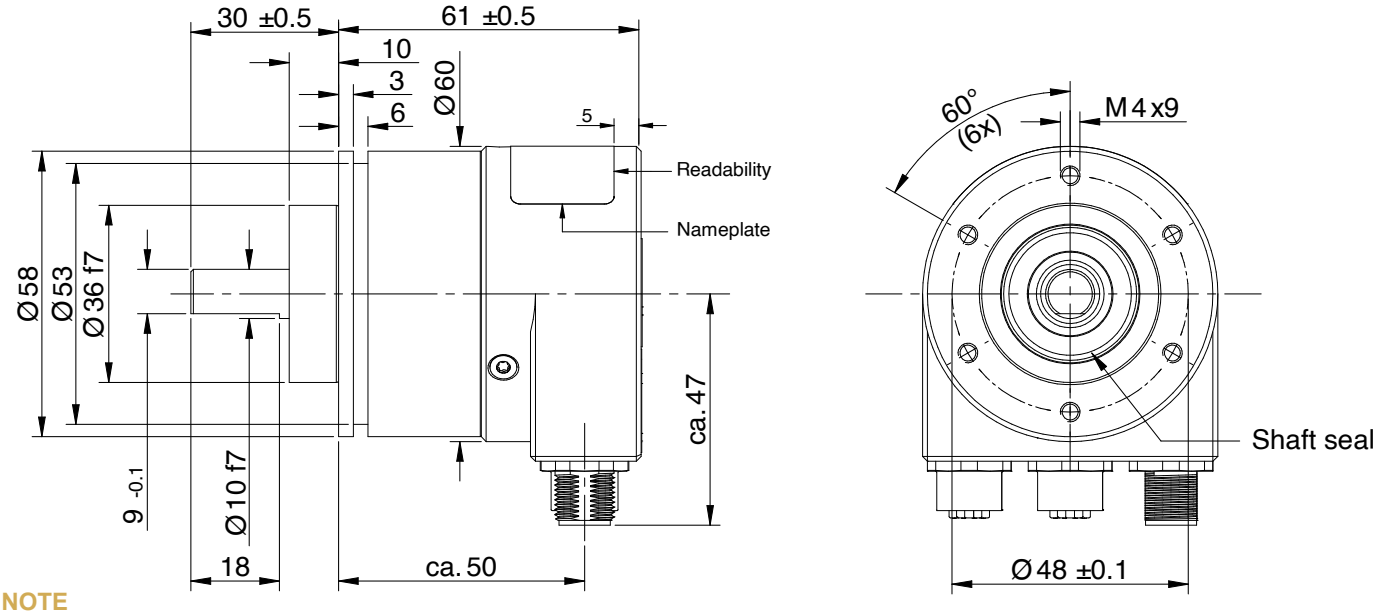

NOTE

The singleturn version is about 15 mm shorter!

OPTIONAL: SHAFT "P" WITH GROOVE AND PARALLEL KEY (MODEL TRT58-KPA...)

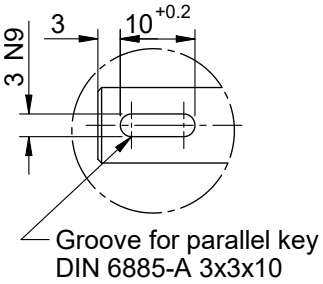

CONNECTOR VIEW WITH M12-CONNECTORS

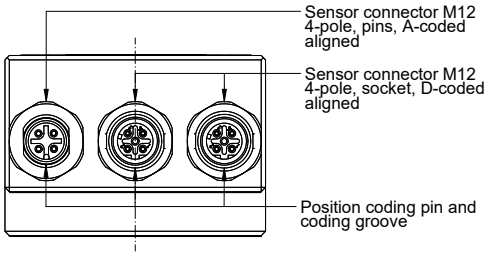

REAR VIEW WITH M12-CONNECTORS

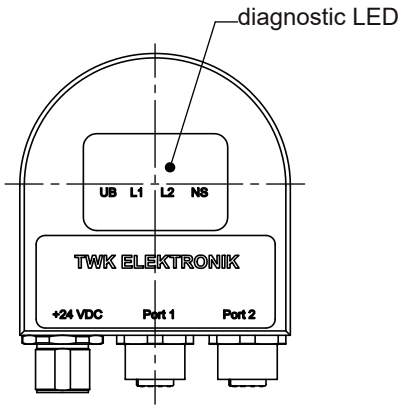

REAR VIEW WITH CABLE OUTPUT

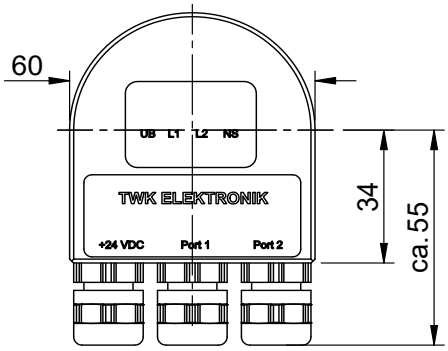

NOTE

The connectors of the stainless steel version are not aligned.

INSTALLATION DRAWINGS

MODEL TRT58-SA65536R4096C4MT01

Dimensions in mm

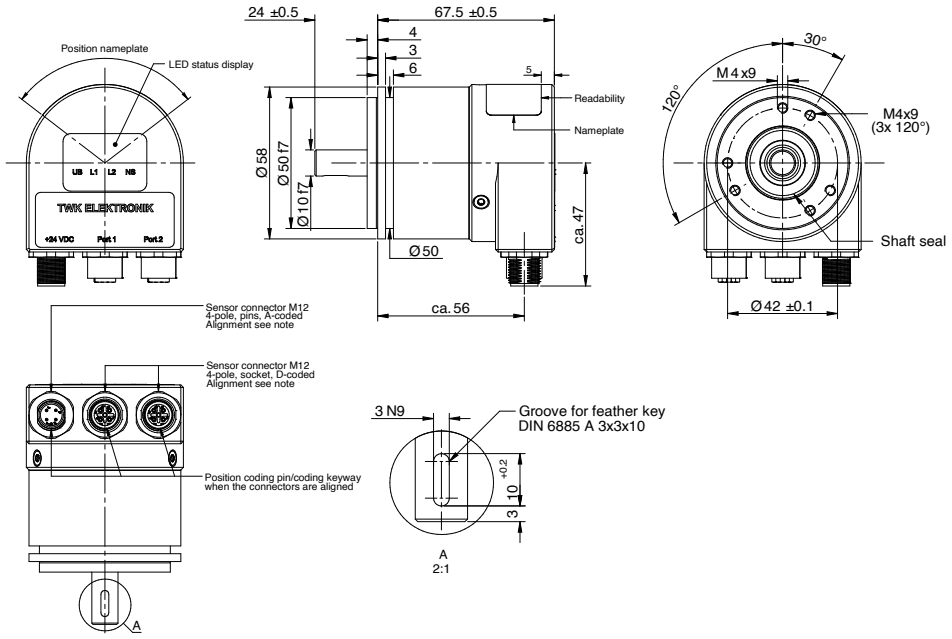

MODEL TRT65-SA65536R4096C4MT01

Dimensions in mm

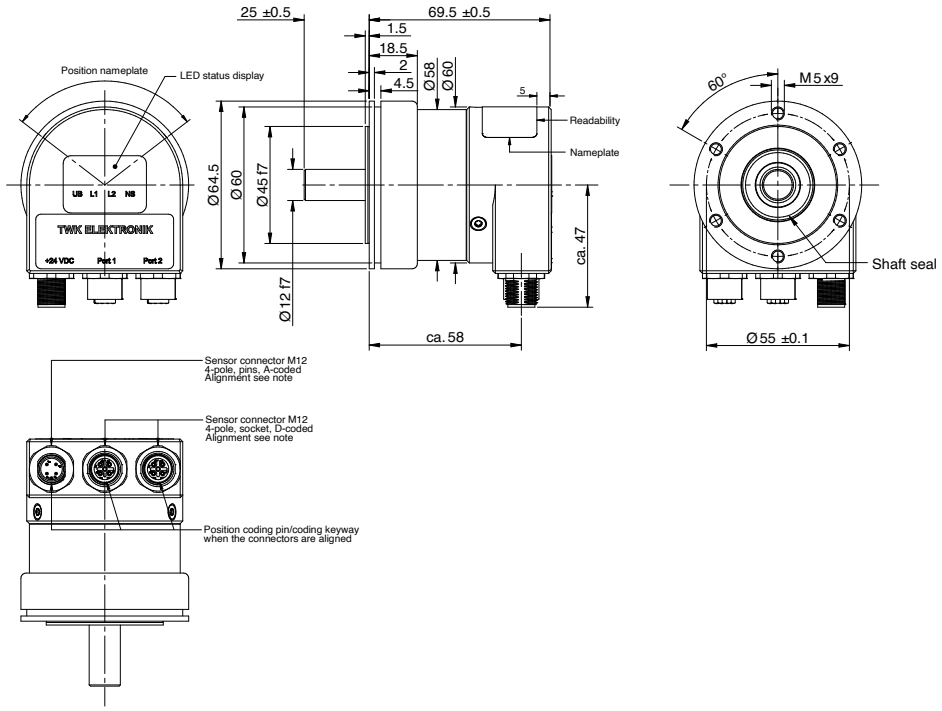

NOTE

The singleturn version is about 15 mm shorter!
The connectors of the stainless steel version are not aligned.

INSTALLATION DRAWINGS

MODEL TRT64-NZA65536R4096C4MT01

Shaft ø 12 mm with flattened area, for mounting the toothed gear

Dimensions in mm

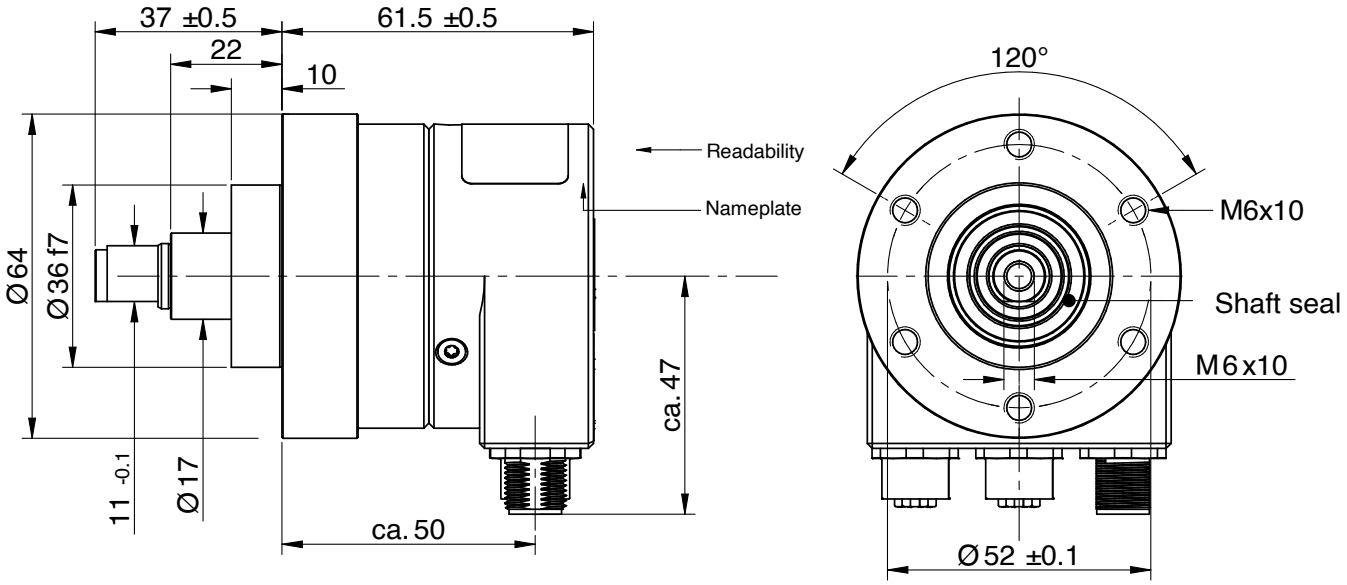

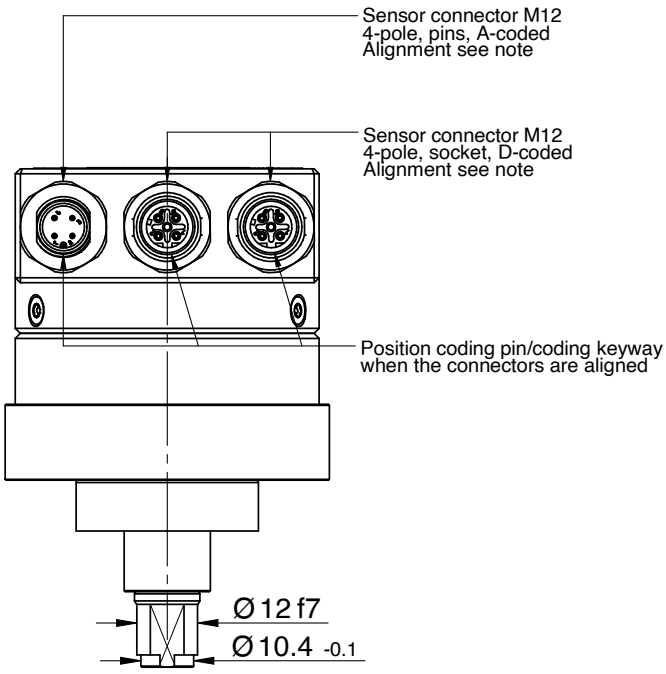

NOTE

The singleturn version is about 15 mm shorter!
The connectors of the stainless steel version are not aligned.

INSTALLATION DRAWINGS

MODEL TRT58-SRA65536R4096C4MT01

Dimensions in mm

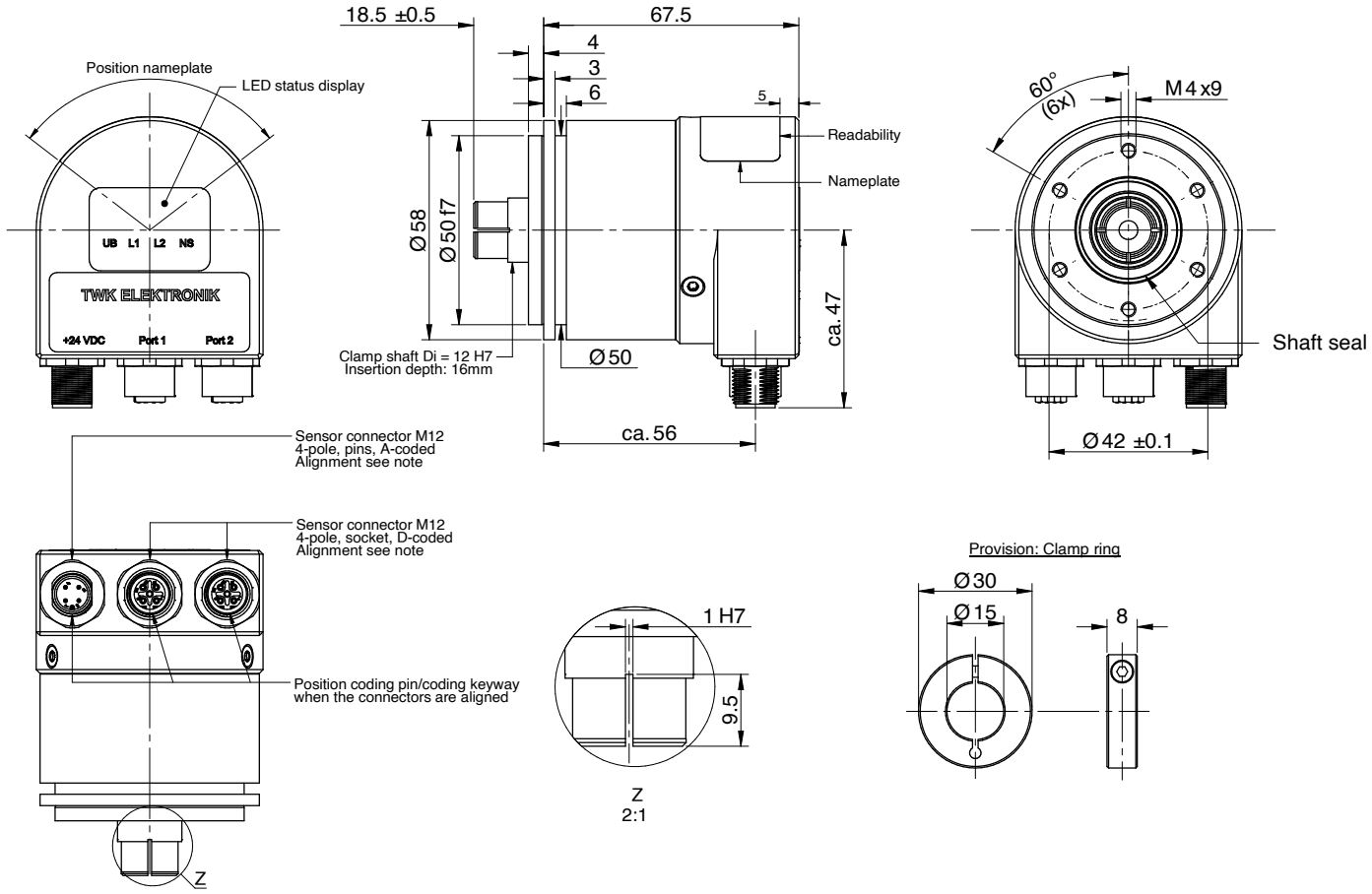

NOTE

The singleturn version is about 15 mm shorter!
The connectors of the stainless steel version are not aligned.

INSTALLATION DRAWINGS

MODEL TRT105-MA65536R4096C4MT01

Dimensions in mm

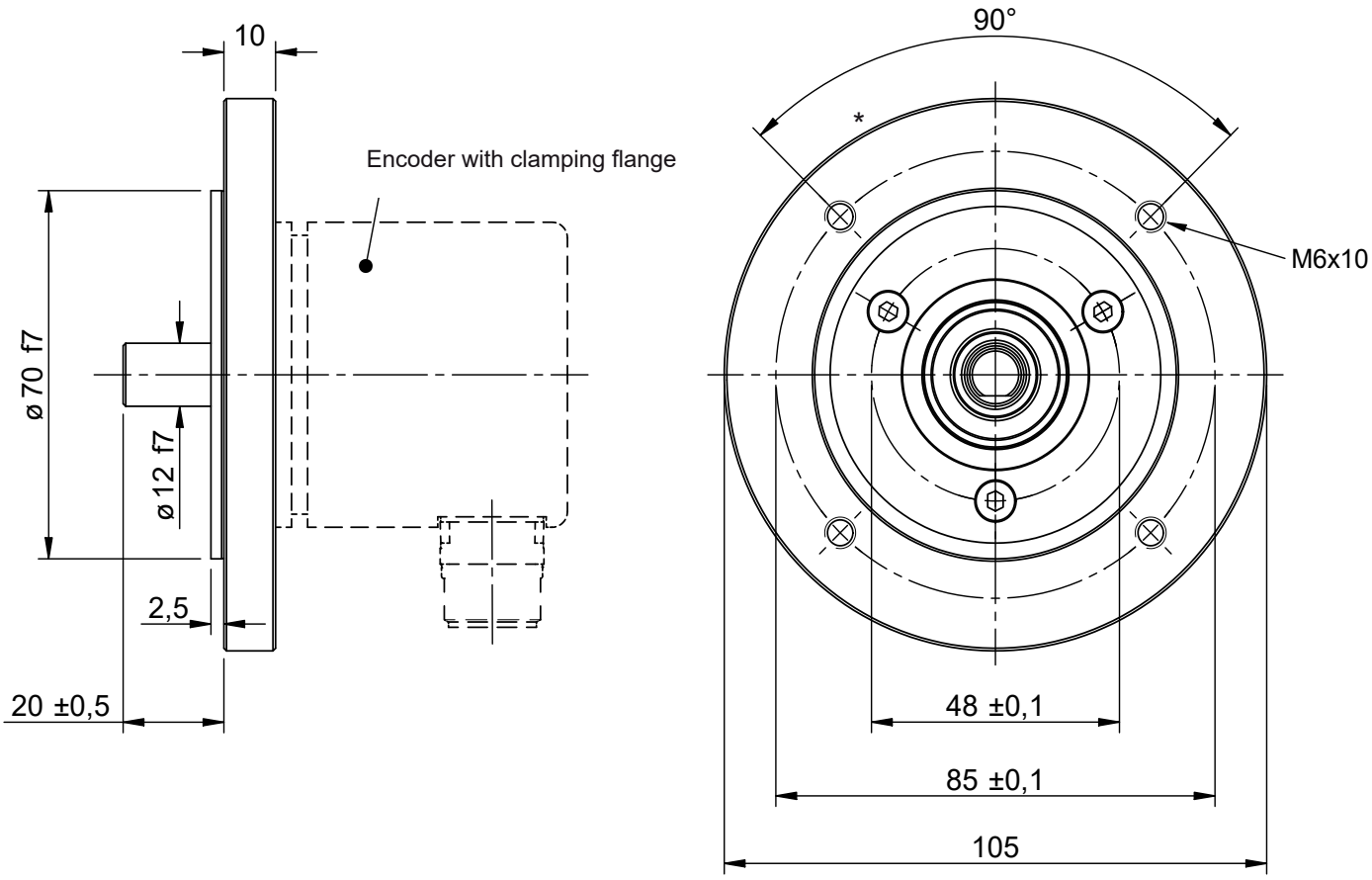

OPTIONAL: SHAFT "P" WITH GROOVE AND PARALLEL KEY (MODEL TRT105-MPA…)

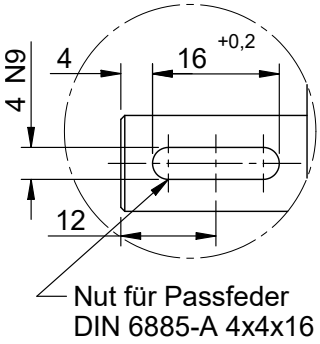

MODEL TRT78: HOUSING WITH EX-PROTECTION FOR ZONE 1/21

See datasheet TRX16360

NOTE

The singleturn version is about 15 mm shorter!
The connectors of the stainless steel version are not aligned.

INSTALLATION DRAWINGS

MODEL TRT64-HPA65536R4096C4MT01 (HEAVY DUTY FLANGE)

Dimensions in mm

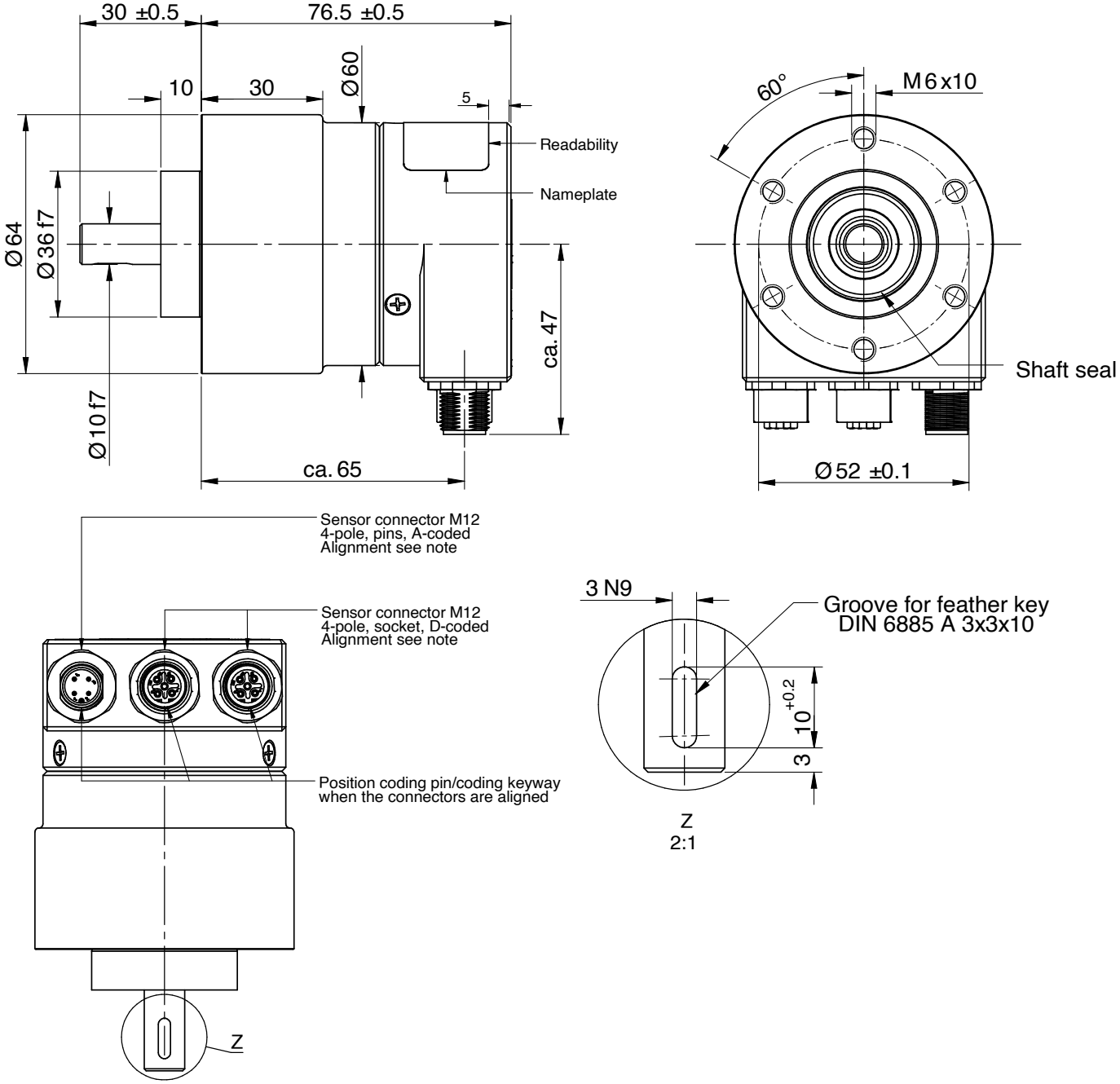

NOTE

The singleturn version is about 15 mm shorter!
The connectors of the stainless steel version are not aligned.
Suitable mounting bracket MW-S-03, see MZ10111