Absolute Electro-optical Encoders

Models CRE 58 - CRE 65 - CRE 66

MULTI-TURN ◻ Parallel or Serial Interfaces

CRE 10106 FE

03 / 2014

- **Compact and robust for mechanical engineering applications**
- **Gray or Natural Binary output code**
- **Resolution up to 8192 positions / 360°∢**
- **Measuring range 4096 turns**
- **Total capacity up to 2^{25} (25 Bits)**
- **Option : Data Control Bit (DCB)**
- **With hardware multiturn gearing**
- **Axial and radial shaft load permissible up to 250 N**
- **IP 65 or IP 66 protection grade**
- **Option : Extended working temperatue range from - 40 C to + 85° C**
- **Possibility of customer specific modifications**

Construction

Flange and case in aluminium - shaft in stainless steel 12 mm ball-bearings with Nilos ring seal or radial packing ring seal - code disc in glas or in deformation resistant plastic - GaAlAs diodes-photo-transistor array with comparator and trigger circuits - gate array - SMD technology.

The CRE 58, CRE 65 and CRE 66 Models have different shaft and flange dimensions (for details see page 3).

The Multiturn section features a unique combination of coded gear wheels for non-ambiguous position sensing.

Electrical Data

Sensor system :	GaAlAs diodes, photo-transistor array
Resolution :	4096 positions / 360°∢ 8192 positions / 360°∢ (optional) 3600 positions / 360° ∢ (optional)
Data Control-Bit (DCB) :	Optional at ≤ 4096 positions
Disc coding :	Gray code
Measuring position deviation :	≤ ± 2'38" at 4096 positions / 360° ∢ ≤ ± 1'59" at 8192 positions / 360° ∢
Measuring range :	4096 turns
Parallel output circuits :	A = Open Collector Darlington C = Open Emitter Darlington D = Push-pull
Output frequency [1] :	10 kHz max.
Latch [1] :	via signal input E1
Enable circuit [1] :	on / off, via signal input E1
Serial output circuit :	E = SSI Differential to RS 422 / 485
Output Code :	Gray or Gray-Excess for non-binary outputs
Code sense :	CW or CCW, via signal input E2
Supply voltage range :	+ 11 V to + 30 VDC
Supply current	
◻ parallel :	60 mA typ. / 80 mA max.
◻ serial *SSI* :	70 mA typ. / 90 mA max.

Mechanical Data

Operating speed :	3000 rpm max. (continuous) 4000 rpm max. (short period)
Angular acceleration :	10^5 rad/s^2 max.
Inertial mass of rotor :	45 gcm^2
Operating torque :	≤ 5 Ncm (8 Ncm - CRE 66) (at 1000 rpm)
Wind-up torque :	≤ 1 Ncm (4 Ncm - CRE 66)
Permissible axial and radial shaft load:	250 N max.
Bearing life expectancy [2] :	10^9 turns
Mass :	0,7 kg

[1] For parallel interfaces only

[2] Longer life expectancy can be achieved with lower loads.

TWK-ELEKTRONIK GmbH · D-40041 Düsseldorf · PB 105063 · Heinrichstr. 85 · Tel +49/211/632067 · Fax +49/211/637705 · e-mail: info@twk.de

Environmental Data

- Operating temperature range: - 20° C to + 60° C
  - ☐ optional (with connector): - 40° C to + 85° C
- Storage temperature range: - 25° C to + 70° C
- Permissible rel. humidity: 85% without condensation
- Resistance to shock: 200 m/s^2; 11 ms (DIN IEC 68)
- Resistance to vibration: 5 Hz ... 1000 Hz ; 100 m/s^2 (DIN IEC 68)
- Protection class (DIN 40050)
  - ☐ CRE 58 and 65 : IP 65 (Nilos ring)
  - ☐ CRE 66 : IP 66 (radial packing ring)

Output circuits

A

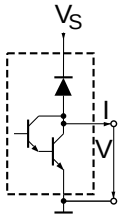

Vmax. = V_S
I max. = 50 mA
Log1 = V_S
Log0 = 1.1 V

C

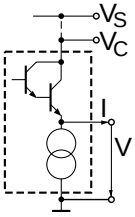

Vmax. = V_C
I max. = 20 mA
Log1 = V_C
Log0 = 0.5 V

D

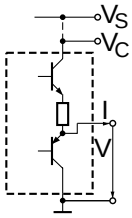

(not for bus mode)
Vmax. = V_C
I max. = 10 mA
Log1 = V_C - 3 V
Log0 = 2 V

Input circuits

E1

active "high"

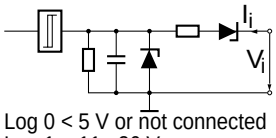

Log 0 < 5 V or not connected
Log 1 = 11...26 V

E2

active "low"

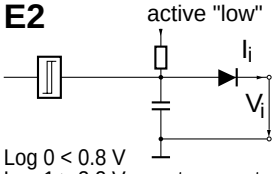

Log 0 < 0.8 V
Log 1 > 3.2 V or not connected

Timing - Diagrams

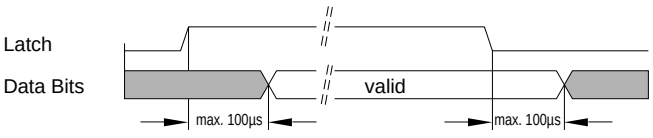

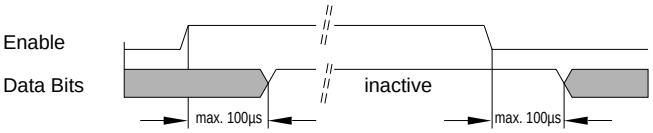

Block Diagram / Serial Interface - *SSI*

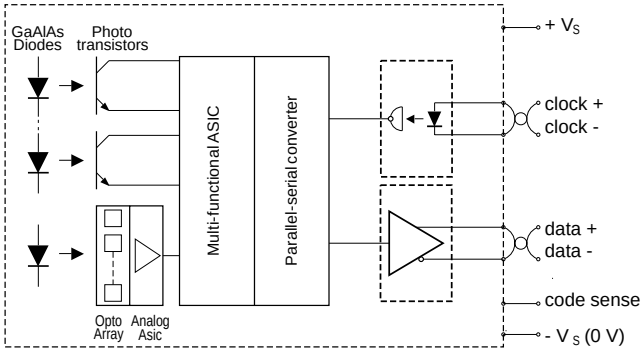

The parallel, absolute angle information derived by the encoder is converted into serial information by an internal parallel-serial converter and then transmitted to a receiving electronic circuit in synchronism with a clock. Important advantages are : Low number of data lines and high reliability.

The SPC Converter Card is available for the conversion of the serial data into natural binary parallel data (Data Sheet 10109).

Interface Profile *SSI* - 25 Bit

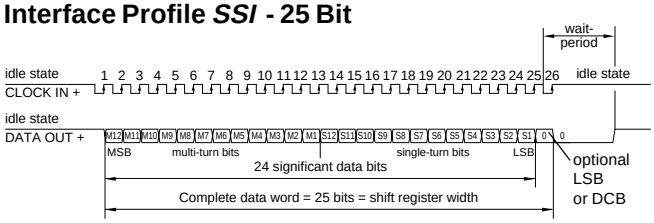

- Monoflop time : 20 µs

Order code format

CRE 58 - 4096 G 24 C E 01

- 01 — Electrical and / or mechanical variants *
- E — Output circuit
  - A = Open Collector Darlington (parallel)
  - C = Open Emitter Darlington (parallel)
  - D = Push-pull
  - E = RS 422 / 485 *SSI*
- C — Electrical connectors
  - C = Connector Bi 723
  - L = Connector RS 25
  - K = Lead
- 24 — 24 Bit (Total capacity)
- G — Output code
  - G = Gray
  - R = Natural Binary
- 4096 — Positions / 360° ⊰
- 58 — Model 58, 65 or 66
- CRE — Series CRE Multi-Turn

* Standard versions carry the final number "01". Any variants will be marked by a following figure according an internal manufacturer`s register.

Dimensions in mm

Interface	L_1	A_1	L_2	A_2	L_3	A_3
Serial *SSI*	75.5	58	78	60.5	76	58
Parallel	97	71.5	99.5	74	97.5	72.0

Model CRE 58
with synchro-flange

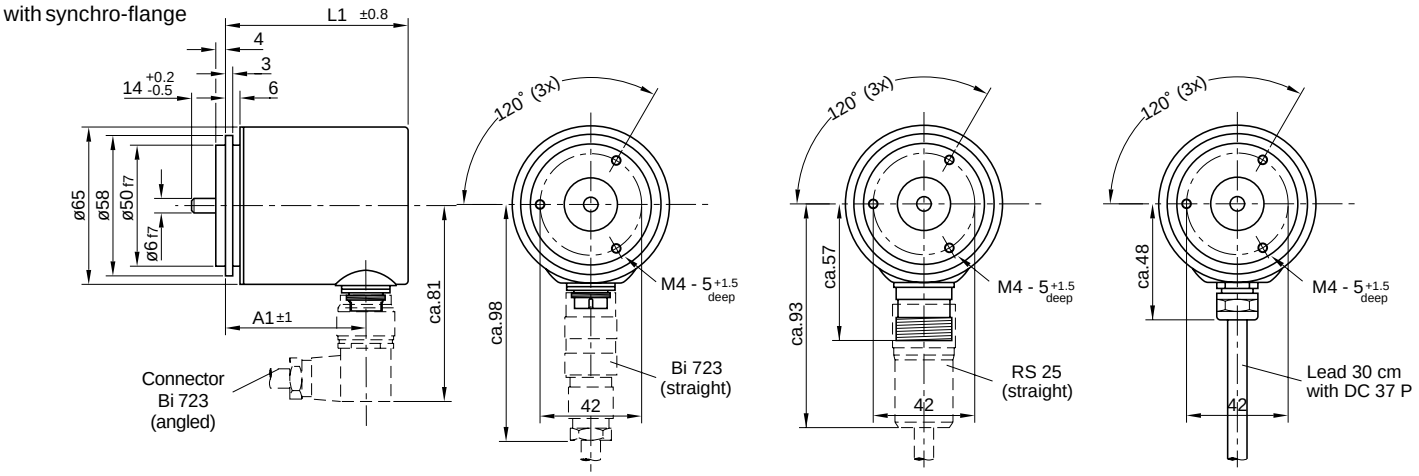

Model CRE 65
with synchro-flange

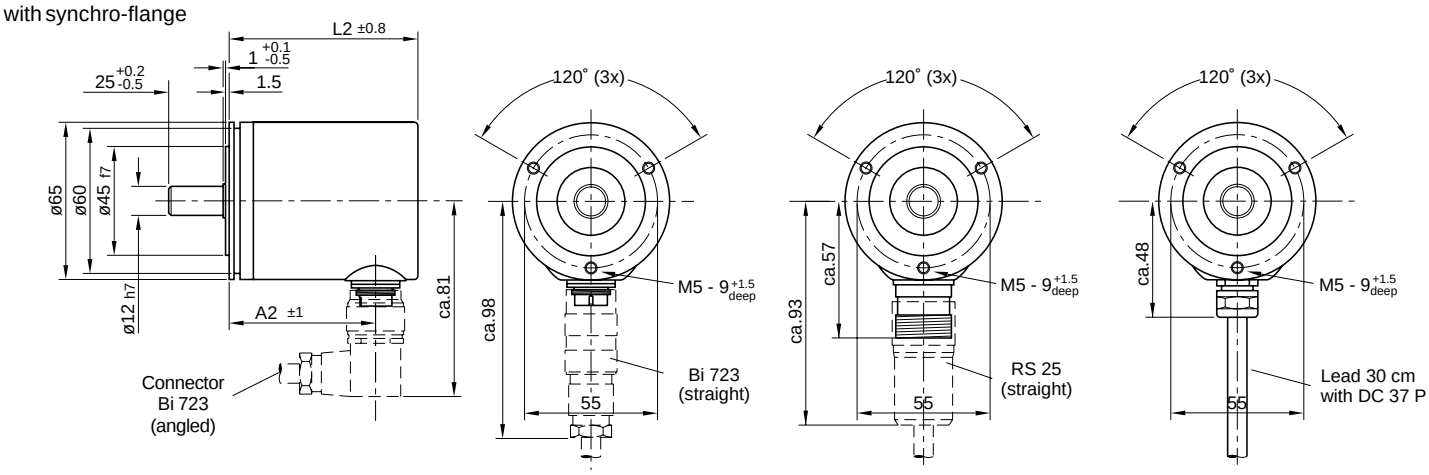

Model CRE 66
with clamping flange,
shaft with flat

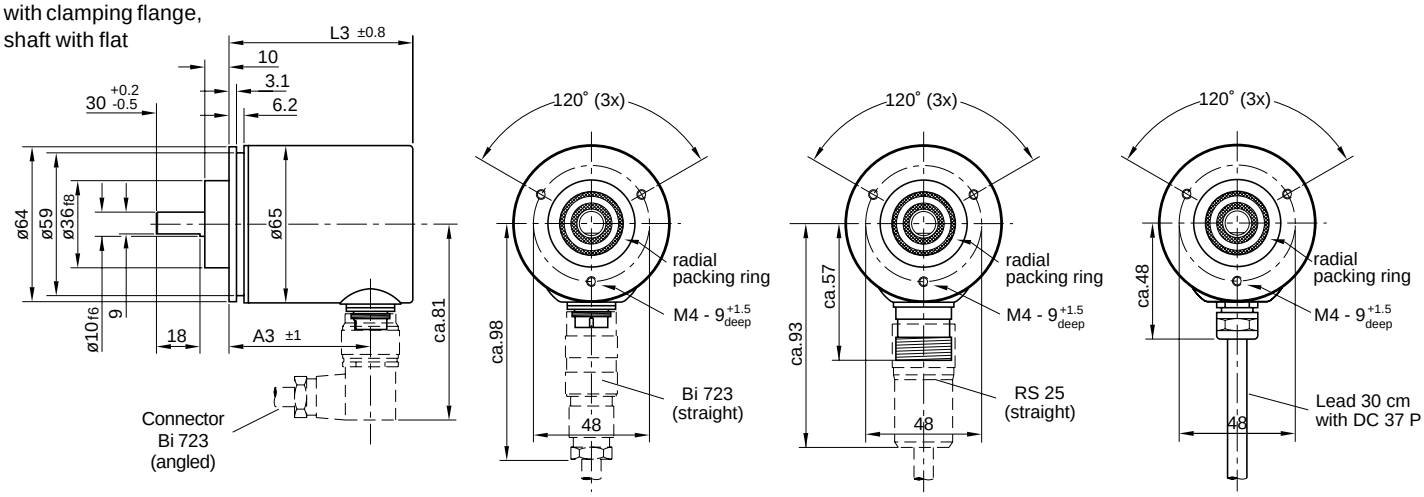

Electrical connections

- **Encoders with parallel interface :**
  K = Lead, 30 cm with D-Subminiature-connector DB 25 P, with plastic housing and with DB 25 S mating plug, solder contacts, protection grade IP 30. - Upon request : Length of lead up to 5 m and/or different connectors at lead end, e.g. Harting HAN 40.

- **Encoders with serial interface *SSI* :**
  C = Round connector Bi 723, 7-way, straight mating plug with PG 9 entry for cable diameters from 6 to 9 mm, black metal case with locking nut, protection grade IP 65, with solder contacts.
  - ◻ (Bi 423 7PS-GG (straight))
  - ◻ (Bi 423 7PS-GW (angled))

  Angled mating plug must be ordered separately.

  L = Round connector RS 25, 12-way, straight mating plug for cable diameters up to 7.5 mm and with screening sleeve, metal housing with Nickel finish and with locking nut, protection grade IP 65, with solder contacts.
  - ◻ (STR 12 G S08 (straight))
  - ◻ (STR 12 W S25 (angled))

  All mating plug must be ordered separately.

  K = Lead exits to special request.

- **Extension Cords**
  The following extension cords are available :
  - ◻ For encoders with parallel interface :

    Cord type 25 x 0.14 SLiYHFCBY with screen and with highly flexible black PVC coat. Outer dia = 9 mm, permissible bending radius 10 x dia for static wiring, 20 x dia for flexible wiring.

    Cord type 36 x 0.14 LIYCY with screen and with grey PVC coat. Outer dia = 9.5 mm permissible bending radius 10 x dia for static wiring, 20 x dia for flexible wiring.
  - ◻ For encoders with serial interfaces *SSI* :

    Cord type 4x2x0.25 LiYCY6 with 4 pairs of twisted wires, with screen and with grey PVC coat.
    Outer dia = 7.5 mm, permissible bending radius 10 x dia for static wiring, 20 x dia for flexible wiring.

  Upon request all cords can be supplied with mating plugs to fit the encoder and with specific plugs to fit the entry of the electronic control unit.

Additional system equipment and accessories

- **Position Indicator PAS 96A / *SSI***

  A 6-decade indicator to go with SSI-Encoders, containing a power supply for the encoder and an additional RS 232 output for PCs.

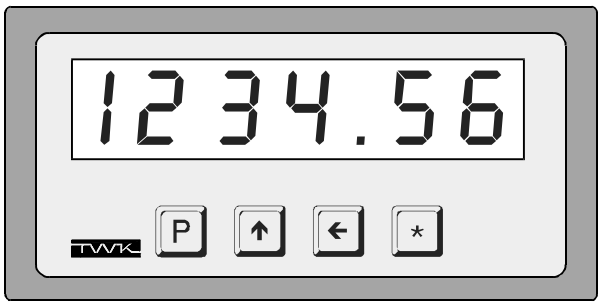

The PAS 96A indicator is designed to permit the programming of the following functions and parameters :

Conversion of the Gray coded data into a decimal indication ◻ Introduction of the scale factor 1, 10, 100 or 1000 ◻ Evaluation of the parity bit ◻ Changing of the code sense (CW or CCW) ◻ Introduction of a reference value (Data sheet 10610).

- **Converter Board SPC**

  This board contains all circuits to convert the incoming *SSI*-data into a parallel natural binary output (Data sheet 10109).

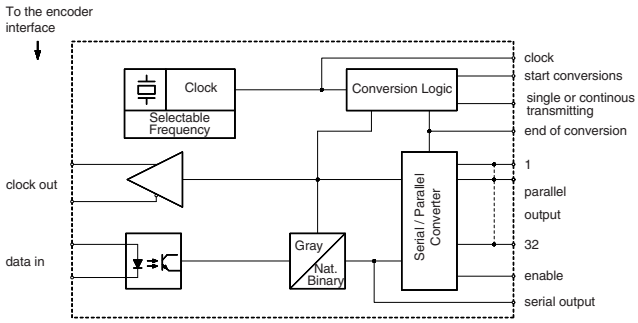
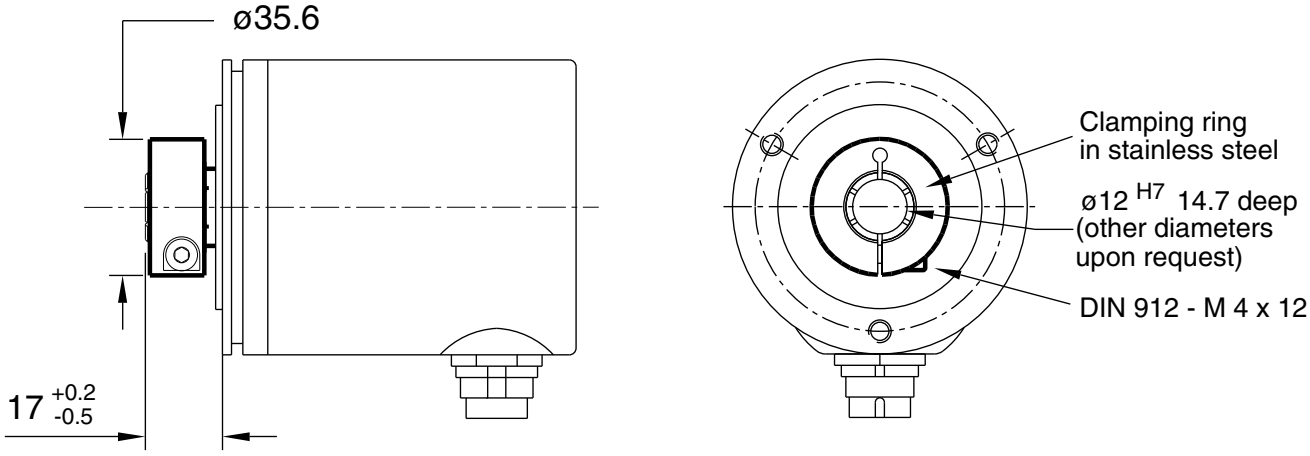
Mechanical variant: Mounting with clamping ring shaft