Functional description

The electronic relay is intended for actuating a magnetic brake.

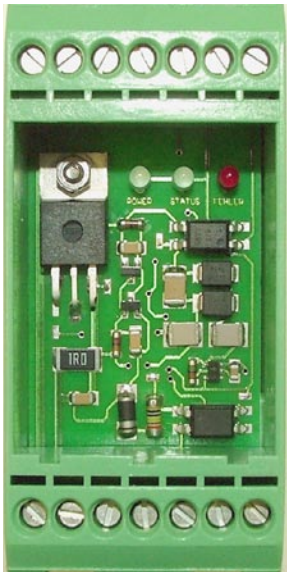

Spark-free switching with a fast switch-off time is achieved via use of the relay. This behaviour is achieved by means of wiring, adapted to the inductivity of the coil, in the relay to dissipate the magnetic energy and due to the voltage-proof dimensions of the circuit.

A magnetic brake is characterised by high inductive resistance. This must be taken into consideration in the design. On switching the voltage on and off, the flowing current does not follow instantaneously, but in accordance with an e-function due to the fact that the magnetic field in the brake has to be built-up and reduced. The magnetic field has a specific, stored energy

energy $\frac{1}{2} L \cdot I^2$ (L = inductivity in H; I = current in A).

When designing the relay, particular attention must be paid to the switch-off process, as the magnetic energy has to be reduced in a „controlled“ manner. This is achieved by means of a current bleeder resistor in the relay.

The following applies when switching off: $I_{(t)} = I_0 \cdot e^{\frac{-t}{\tau}}$ the time constant τ specifies the speed with which the current drops off.

This is determined by the inductivity, the ohmic resistance of the brake coil, the connected current bleeder resistor and iron losses in the brake yoke. The current $I_{(t)}$ which is still flowing results in the fact that the brake drops off following a delay. A voltage additionally arises at the current bleeder resistor. The drop-off time can be influenced via the selection of this resistor in the relay. It must not be too small, as $I_{(t)}$ otherwise drops off too slowly and the brake yoke remains applied for too long. If the current bleeder resistor is too large, the drop-off time is short, but an excessively high voltage occurs, which may damage the relay and other components.

Relay inputs and outputs

Two switch outputs for status and faults and three light-emitting diodes for status, faults and supply voltage enable the relay‘s function to be monitored by the control system and the operator on-site.

Switch output logic:

Status output: Contact closed when:	Switch input active
Fault output: Contact closed when:	1. Switch input active, coil connection no voltage. 2. Switch input inactive, coil connection conducts voltage.

The switch outputs, the supply and the switch input are decoupled from the brake coil current circuit by means of galvanic separation.

The input for the brake coil‘s voltage supply is protected against polarity reversal, and the brake coil connection is short circuit-resistant.

A supply voltage of 24 VDC is required to operate the relay.

The electronic relay is intended for installation on a top hat rail.

Blockdiagram

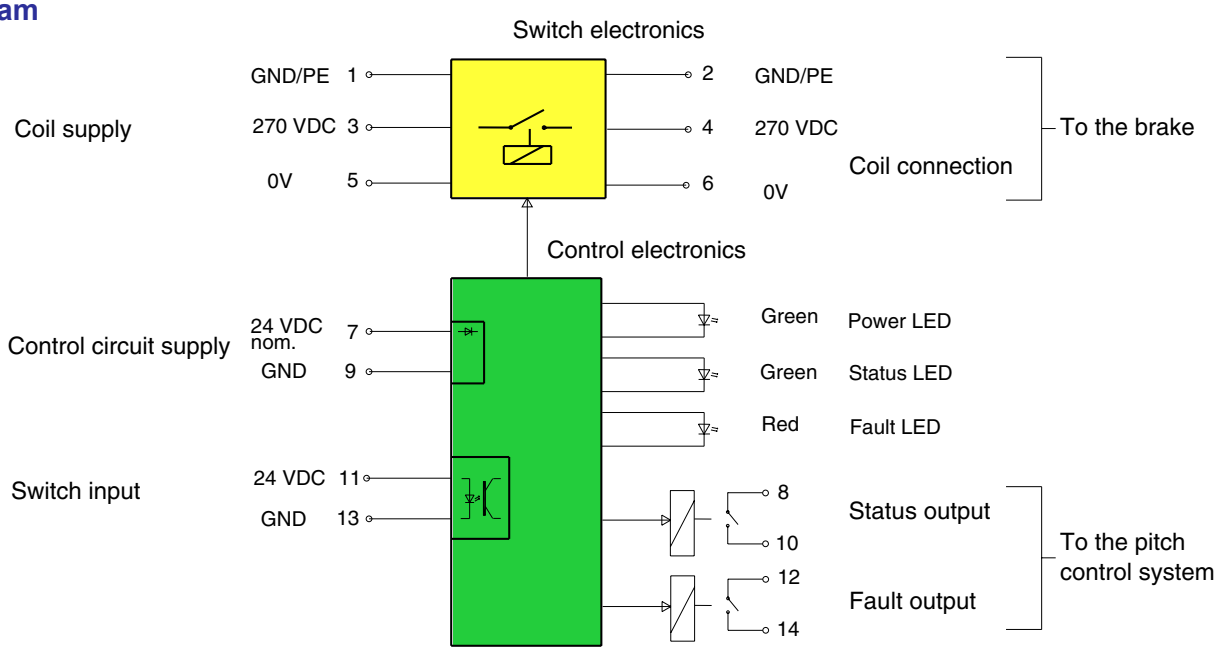

Protection circuits

Overvoltage protection

Overvoltage protection is achieved via two measures:

1. Soft transistor switch-off via co-ordinated dimensioning of the RC elements in the switching current circuit. This prevents the occurrence of uncontrollable switching peaks.
2. Free-wheeling circuit comprised of series connection of a diode and a resistor (> current bleeder resistor).

   The resistor is adapted to the coil inductivity. This enables optimal dissipation of the energy stored in the magnetic field via the resistor. The diode prevents a current from flowing through the resistor during the switch-on time.

   The magnetic energy is $\frac{1}{2} L \cdot I^2$ (L = inductivity in H; I = current in A).

   In our case, with an inductivity of 2839H and a current of 0.27 A, the magnetic energy stored in the brake magnet is approximately 103 Ws.

   The current bleeder resistor is designed to 2 kOhm. This dimension enables switching times of approx. 0.1 s with a maximum rebound voltage of approx. 400 V. The switch-off process is shown in the following diagrams. The relay‘s limit values (see list of limit values) are not nearly achieved, with the result that a good safety reserve is available. The use of free-wheeling diodes or varistors directly on the motor brake is not necessary.

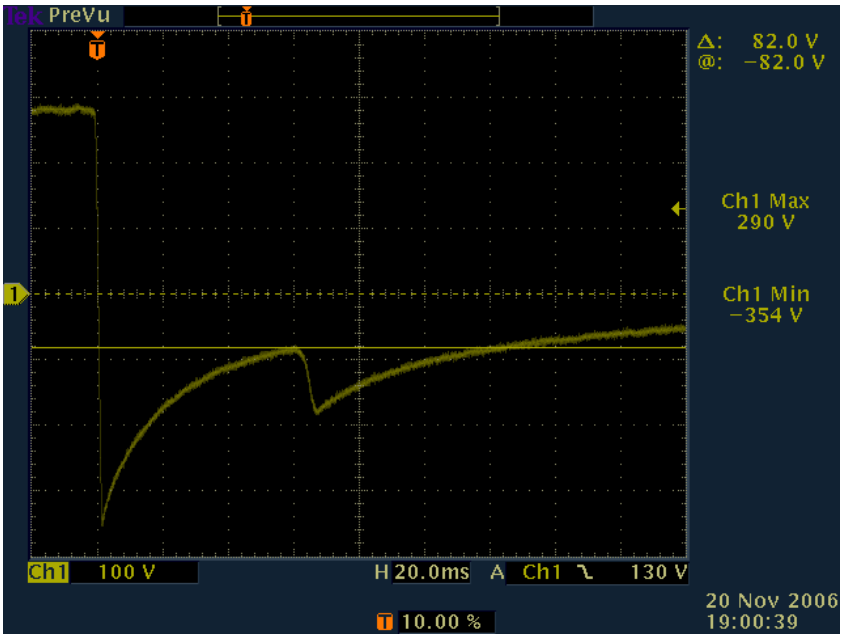

Setting:

100 V/cm

20 ms/cm

V_S = 290 V

$V_{Rebound}$ = 360 V

t_{off} = 70 ms

(Note: The sudden reduction of inductivity when the yoke drops off after approx. 70 ms leads to an additional, small voltage peak.)

Overcurrent fuse

To prevent a defect in the brake‘s current circuit from leading to destruction of the relay, a protection circuit, which switches the relay off in the event of impermissible overcurrents, is used. Simple current limitation is not possible, as the relay then has to take on the coil‘s output and very complex cooling measures then become necessary for the switching transistor.

The overcurrent fuse‘s response current is defined as 0.5 A.

The fuse can be reset by switching the switching voltage on and off at the switch input.

Polarity reversal protection

Polarity reversal protection is provided for the coil supply, the supply voltage for the control circuit and the switch input. The status and switch outputs are merely switch contacts, which do not require polarity reversal protection.

In all cases, the polarity reversal protection is implemented via series connection with a diode.

Operating specifications

- Brake coil supply:

  Voltage: 0 - 300 VDC
  Current: 0 - 500 mA

- Brake coil connection:

  Max. rebound voltage: 750 VDC
  (For inductive load only!)
  Switching time: < 0.5 sec.

- Control circuit supply:

  Voltage: 21 - 32 VDC
  Current: < 50 mA
  (Polarity reversal-resistant)

- Switch input:

  Voltage „on“: 18 - 28 VDC
  Voltage „off“: ≤ 5 VDC
  Current: < 10 mA bei 24 VDC
  (Polarity reversal-resistant)

- Control relay outputs:

  Maximum load: 0.5 A bei 32 VDC
  0.5 A bei 60 VAC

- Ambient temperature (operation): –20 °C ... 60 °C

Dimensions in mm

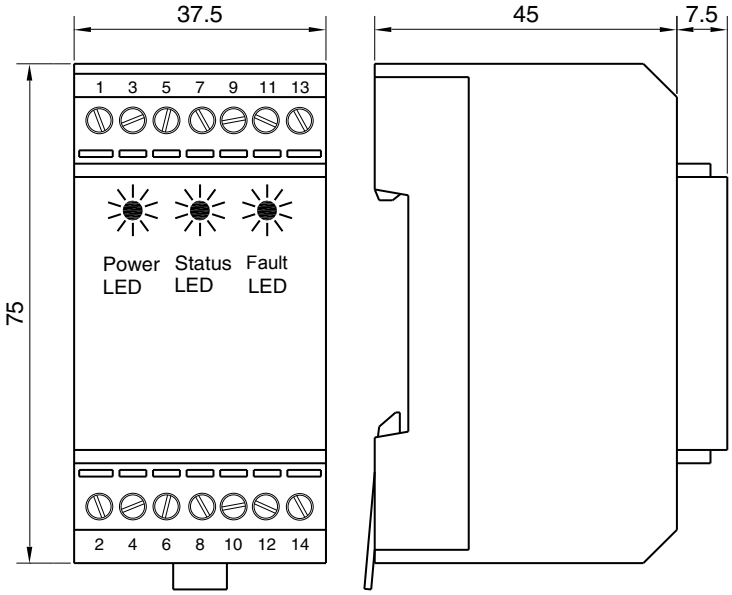

Connection data, housing

Connection type, threaded connection
Stripped length 8 mm
Bolt threads M3
Min. line cross-section, rigid 0.2 mm²
Max. line cross-section, rigid 4 mm²
Min. line cross-section, flexible 0.2 mm²
Max. line cross-section, flexible 2.5 mm²

General data, housing

Classified according to UL 94 (USA):
Barely inflammable thermoplastic, fibrereinforced polycarbonate PC-F: Inflammability class V0 (transparent polycarbonate cover PC: V2)

Length 75 mm
Width 37.5 mm
Height 52.5 mm
Input/output test voltage 3.5 kV AC

Installation position arbitrary
Installation note: Can be installed in rows without spaces
Other standards/stipulations DIN VDE 0110