Inclination sensor on MEMS technology
Model NBA51 with analogue output

Document no.: **NBA 15607** BE
Date: 04.11.2020

- **MEMS technology**
- **Analogue output signal**
  - **4 ... 20 mA**
  - **0 ... 10 VDC**
  - **0 ... 5 VDC**
  - **0.5 ... 4.5 VDC**
- **High protection grade IP67 and wide temperature range from -40 °C ... +85 °C**
- **Stable accuracy over whole temperature range**
- **Resolution 0.01°**
- **Single axis 360° or ±180°**
- **Double axis ±60°**

Design and function

NBA51 provides registration of inclination in the gravitation field using MEMS sensors (Micro-Electro-Mechanical-System) with subsequent digitisation and linearisation via controller. It is available with one or two measurement axes. The inclinometer working principle is based on a micro machined silicon capacitive transductor.

Applications include cranes, aerial platforms, drilling machines, excavators and many more, which have to withstand harsh environments, especially in mobile machines, since it has very compact dimensions and weight. Furthermore the high shock/vibration resistance combined with a high reliability make this inclination sensor perfect for outdoor and indoor applications. Its Polyamid with glass fiber housing, makes this product extremely strong, durable and cost effective.

The output signal can be preset via pin for easy adjustment of the output signal.

Redundancy can be achieved by stacking sensors on top of each other (see drawings).

Technical data

Electrical data

- Power supply: 9 ... 30 VDC
- Reverse polarity protection: Yes
- Measuring range: ±60° for horizontal version
360° for vertical version
±180° for vertical version
- Accuracy (+25 °C): < ±0.3° (for 360° full scale and ±30° half scale sensor)
< ±0.5° (for ±30° to ±60° half scale sensor)
- Resolution: 0.01°
- Temperature coefficient: 0,01 °/K
- Initialing time: <0,3 s after power on

Environmental data

- Temperature range: -40 °C ... +85 °C [-40 °F ... +185 °F]
- Shock resistance: 30 g, 11 ms - acc. to EN 60068-2-27
- Vibration resistance: 10 ... 500 Hz - acc. to EN 60068-2-6
- Electromagnetic compatibility: acc. to EN 61326-1, EN 61326-3-1
- CE compliant: acc. to EMC guideline 2014/30/EU
RoHS guideline 2011/65/EU
- Material housing: PA6 + GF30%
- Protection grade: IP67
- Weight: approx. 100 g [3.53 oz]

Electrical connection

Connector M12 x 5 pins, A-coded

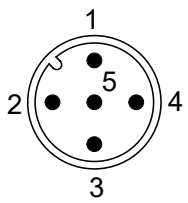

Single axis (axis type S, T)

Pin	Function
1	+Vs
2	should not be connected
3	GND
4	Vo/Io output 1 (CW)
5	zero input *

Double axis (axis type D)

Pin	Function
1	+Vs
2	Vo/Io output - Y axis
3	GND
4	Vo/Io output - X axis
5	zero input *

* connect to GND for two seconds to set an offset (low active)

Order code format

NBA	51	–	P	xxx	S	S	B	01

Electrical and mechanical variants:
01 Standard

Output signal:
B 4 ... 20 mA
C 0 ... 10 VDC
D 0 ... 5 VDC
E 0.5 ... 4.5 VDC

Electrical connection:
S Male device connector M12
K Cable 30 cm with male connector M12

Axis type (Number of axes and signal output)**:**
S Single axis, signal output: 0 ... xxx° (select 360*)
T Single axis, signal output: ± xxx° (select 180*)
D Double axis, signal output: ± xxx° (select 060*)

Measuring range:
xxx 0 ... xxx°: full scale value (select '360'*) → axis type S
± xxx°: "half" scale value" (select '180'* or '060'*) → axis type T, D

P **Housing material:**
Polyamide 6 with 30 % glass fiber

Design form:
51 51 mm

Model:
NBA with analogue interface

Examples:

Axis type S:	**NBA51-P360SSB01**	→	0 ... 360°	→ signal z-axis
Axis type T:	**NBA51-P180TSD01**	→	-180°... +180°	→ signal z-axis
Axis type D:	**NBA51-P060DSB01**	→	-60° ... +60°	→ signal x-axis and y-axis

See drawings on page 4 and 6 for axis definitions and signal outputs.

* Smaller values can be realized, only in terms of calibration. (see page 2: Technical data/Electrical data/Accuracy)
There is no overflow value at the specified range, output is always as described on page 6.

Installation position

The sensor configuration and the resulting top facing sides, are represented below.

The side indicated with number '1', is the side, where the TWK logo and the Serial number is found.

In case of a **2-dimensional** version (e.g. NBA51-P060DSE01) the **top** facing side is represented with the number **'1'**.

In case of a **1-dimensional** version (e.g. NBA51-P360SSE01) the **top** facing side is represented with the number **'2'**.

The examples below show the turning direction and the output angle from the zero position, depending on the orientation of NBN51.

The counting direction and the zero position, represented in the pictures below, represent the default preset. They can however be changed according to the customers needs.

Installation position double axis (D)

Double axis NBA51 inclination sensor (axis type D)

The 2-dimensional inclination sensor must be mounted with the base plate in horizontal position, i.e. parallel to the horizontal line.

The sensor can be inclined both towards the X and Y axis at the same time.

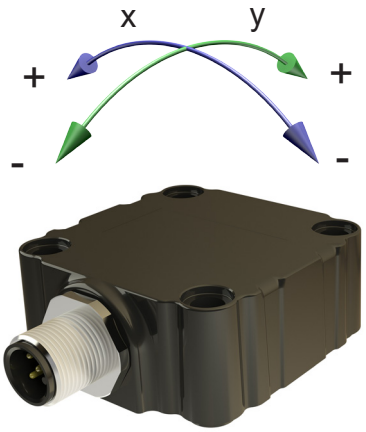

Installation position single axis (S, T)

Single axis NBA51 inclination sensor (axis type S, T)

The 1-dimensional inclination sensor must be installed with its Z-axis in line with the force of gravity, as illustrated.

The 1-dimensional sensor default position is 0° as shown in the following illustration (connector down).

Z = 0°

Axis type S (0...360°)

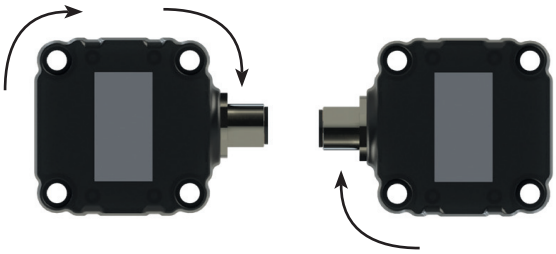

Z = 270° **Z = 90°**

Axis type T (± 180°)

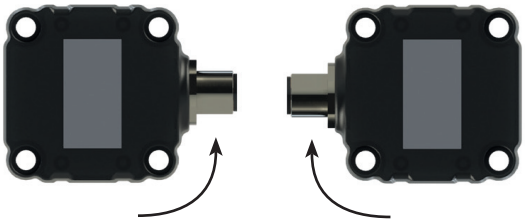

Z = -90° **Z = +90°**

Installation drawing

Dimensions in mm

Sensor NBA51 can be mounted easily one upon the other via ø 8 mm centerings.

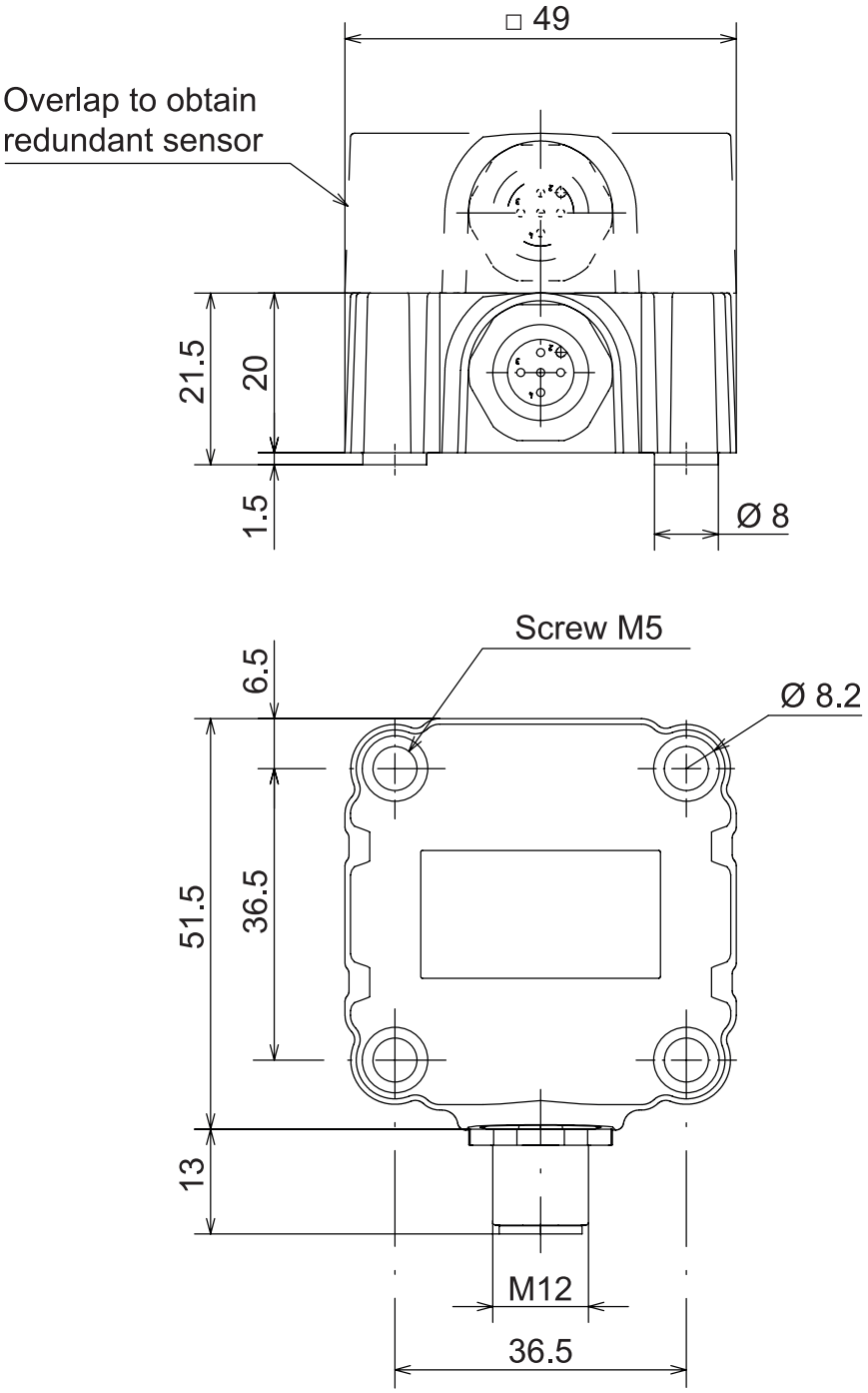

Analogue signal outputs

Single axis: Axis types S and T
(Shown for maximum angle)

Double axis: Axis type D
(Shown for maximum angle)

S (at 0...360°) **T (at ± 180°)** **D (at ±60°)**